ALFA

Upgrade your oven.
Upgrade your life.

Home Pizza Oven

Nati in Italia, nel 1977.

Produced in Rome for nearly 50 years.

Alfa Forni pizza ovens are born in Italy and combine beauty, craftsmanship and passion to transform your life.

Handmade **in Italy**

Alfa's headquarters are located in Anagni, between Rome and Naples, in the home of pizza.

The word 'artisan' comes from 'art'. That is why being an artisan, today more than ever, means combining creativity and skill, energy and passion to create something unique with your own hands.

For almost 50 years, our domestic and professional ovens have been recognised worldwide for their quality.

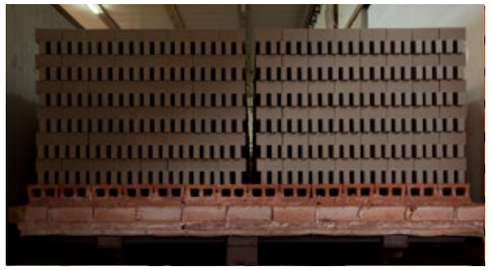

Upgrade your oven. Upgrade your life.

Alfa Forni pizza ovens were born in Italy: they combine beauty, craftsmanship and passion to transform your life.

URBE

Light Up the taste!

Certified for indoor domestic use, Urbe is the versatile electric oven that can transform any corner of your home, from the kitchen counter to the balcony, into a real gourmet pizzeria.

Its distinctive features make it the ideal companion for anyone wanting to enjoy authentic Neapolitan pizzas at home with ease and style.

It can reach very high temperatures, up to 400°C, the maximum allowed by indoor certification.
This means efficient cooking, similar to a wood-fired oven, and a pizza ready every 2 minutes.

Besides pizza, you can cook any leavened food, from bread to desserts, as well as roasts, gratins, and much more.

Urbe is designed to be durable and able to handle any culinary challenge.

For more info,
scan the Qr-Code

Characterized by elegant lines and emotional lighting effects, it will enhance your spaces as well as your flavors!

Anthracite Grey

Versatile
For all seasons,
Urbe adapts to your needs.

Ready to use
Plug the oven into the power outlet and start enjoying your favorite pizza.

Easy Control
The soft touch knobs make temperature adjustment easy.

Light Grey

64.3x63.x42.5h cm | 45 kg | 3100 W | 4 Functions | 4 panoramic windows

Limited Edition

I colori d'Italia

Seven cities for seven colors

The limited edition consists of 7 models, each characterised by a different glossy lacquer. In turn, each colour is combined with a large Italian city, whose skyline is engraved on the oven door.

Heat Genius™

Alfa's technology trifecta!

Authentic HeatKeeper™ Firebrick

Vs ordinary lava stone or ceramic

Alfa uses an authentic firebrick in every pizza oven they make. This HeatKeeper firebrick, which they make in their factory in Rome, Italy, the home of pizza, absorbs and stores heat far better than the lava stone or ceramic used in other pizza ovens. This is crucial to baking a crispy, moist crust at precisely the right temperature, quickly and without burning.

DoubleDown Ceramic Superwool® Insulation.

vs ordinary rock wool insulation (or no insulation at all)

The space between the two stainless steel walls on an Alfa Pizza Oven is filled with DoubleDown Superwool® insulation.
This European ceramic fiber offers up to twice the heat resistance of the rock wool insulation used in other artisan at-home pizza ovens, which maintains the heat and allows you to consistently bake perfect pizzas. It also allows for faster heat recovery between pizzas and dramatically lowers the temperature of the outer oven wall.

Patented Full Effect Full Circulation Flue System®

Vs ordinary "up and out" chimneys

Other pizza ovens exhaust precious heat out the chimney at the top of their oven. Up and out! Not Alfa. The chimney may be at the top, but, thanks to the patented Full Effect Full Circulation Flue System®, hot air circulates fully around the chamber and is driven back down to where it can heat the firebrick and pizza. This is key, as it ensures the proper temperatures required to bake both crust and toppings. The circulating heat then hits a deflector at the top of the oven and travels up an escape where it finally exits out the chimney. Around and down. Then up and out. Clever!

MODERNO Line

Soft, rounded curves, custom colours and all the Alfa technology to convey character to young and dynamic outdoor spaces.

FUTURO Line

Minimalism, functionality and discreet elegance for ovens capable of integrating perfectly into premium outdoor kitchens.

MODERNO Line

Curved lines, Italian design and the best of Alfa technology coexist in the Moderno Line and convey character and style to young and dynamic spaces.

MODERNO 1 Pizza

A light and compact wood-burning or gas pizza oven, with the highest performance.

Dimensions
74 x 55 x 105h cm

Heatkeeper Refractory Floor
Wood 60 x 40 cm | Gas 50 x40 cm

Fuel
Wood, Gas or Hybrid

Weight
54 Kg

MODERNO 2 Pizze

A compact wood-burning or gas pizza oven ideal for cooking fragrant pizzas and more.

Dimensions
95 x 70 x 105,5h cm

Heatkeeper Refractory Floor
Wood 70 x 50 cm | Gas 60 x 50 cm

Fuel
Wood, Gas or Hybrid

Weight
79 Kg

MODERNO 3 Pizze

A wood-burning or gas pizza oven that can cook multiple recipes and 3 pizzas at the same time.

Dimensions
108 x 73 x 114h cm

Heatkeeper Refractory Floor
Wood 90 x 50 cm | Gas 80 x50 cm

Fuel
Wood, Gas or Hybrid

Weight
97 Kg

MODERNO 5 Pizze

A semi-professional wood-burning or gas pizza oven for those who want to share countless recipes.

Dimensions
118 x 102 x 149h cm

Heatkeeper Refractory Floor
Wood 100 x 70 cm | Gas 85 x 70 cm

Fuel
Wood, Gas or Hybrid

Weight
Wood 156 Kg | Gas 170 Kg

FUTURO Line

The functional design, the craftsmanship and the most innovative technology ensure the FUTURO Line ovens are reliable, robust and precise when cooking.

FUTURO 2 Pizze

A pizza oven that blends design and innovation for impeccable and uniform cooking.

Dimensions
100 x 63.8 x 123h cm

Heatkeeper Refractory Floor
Gas 70 x 40 cm

Fuel
Gas or Hybrid

Weight
106 Kg

FUTURO 4 Pizze

A pizza oven with a semi-professional performance, ideal for large dinners with friends.

Dimensions
110 x 89,4 x 151h cm

Heatkeeper Refractory Floor
Gas 80 x 60 cm

Fuel
Gas or Hybrid

Weight
137 Kg

Cooking Station – Modular system

Alfa solutions to efficiently place your oven while turning your garden into a real home pizzeria.

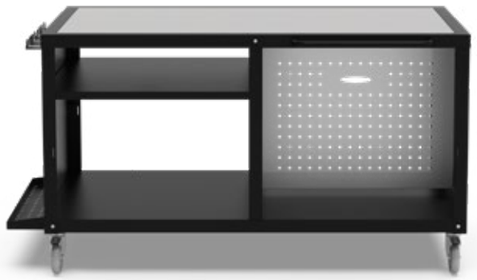

Cooking Station 160

Cooking Station 80

The Cooking Station can be enriched with numerous accessories that will enable you to complete your workbench.

Structure 160

Structure 80

Kamado Large Module

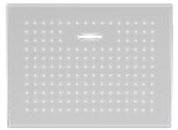

Tank covers

Shelf 80

Top in white Corian 80-160

Steel tops 80-160

Peel support with integrated basin

Choose your Alfa Cooking Station and transform your outdoor space into a flawless cooking space, suitable for any culinary occasion.

Oven Bases

Alfa bases are the perfect solution to guarantee you have the best outdoor experience with your oven, making it easily transportable from one area to another in your outdoor spaces.

1 o 2 Pizze

Designed for the smallest ovens in the Alfa range, this base guarantees great practicality in small sizes. It is easy to assemble and disassemble and convenient to carry when travelling: the ideal solution to recreate your pizzeria corner, wherever you take it.

This base is designed to offer you maximum comfort and practicality

It can be used with the:
Moderno 1 Pizza, Moderno 2 Pizze, and Classico 2 Pizze ovens

3 o 4 Pizze

For our medium-sized ovens, 3 or 4 pizzas, we offer a more robust base, with two closed side panels. Easily assembled and disassembled, it can be conveniently transported by car, thanks to specially designed packaging.

It can be used with the:
Moderno 3 Pizza, and Classico 4 Pizze ovens

5 Pizze

This base is dedicated exclusively to supporting the largest oven in the Moderno line, capable of cooking up to 5 pizzas.

Featuring an exclusive design perfectly coordinated with the oven and the monobloc carbon steel structure; it is the ideal solution both as a support surface and to move the product where it is needed.

In addition, it is designed to allow you to enjoy your oven with maximum comfort and convenience.

It can be used with the:
Moderno 5 Pizze oven

Ovens Accessories

Everything you need to increase the versatility of Alfa ovens and free your creativity in the kitchen.

For more info,
scan the Qr-Code

PIZZAIOLO KIT

The Kit Pizzaiolo is a careful selection of pizza-making tools whose main features are:

The Pizza Peel set with all the accessories to better manage your home oven and bake pizzas like a pro.
A huge range of pizza-making utensils such as the pizza dough box and the dough ball peel, the infrared thermometer, the pizza cutter, the chopping board, the oven mitt, the apron and the Alfa cookbook.

Compatible with all Alfa home ovens.

Large Pizza Peel Set

A set of Alfa design professional pizza peels, with practical length-adjustable handles, designed to easily manage the fire, cooking and cleaning of the oven.

Rake Peel

The ember rake allows you to prepare the cooking floor and to move ash.

Large Pizza Peel

Care and attention to the patented design and materials make the Alfa peel an indispensable professional tool for making pizza.

Turner Peel

You can use the round pizza peel to rotate pies in the oven.

Brush Peel

The brush comes with brass bristles for better cleaning without damaging the oven floor.

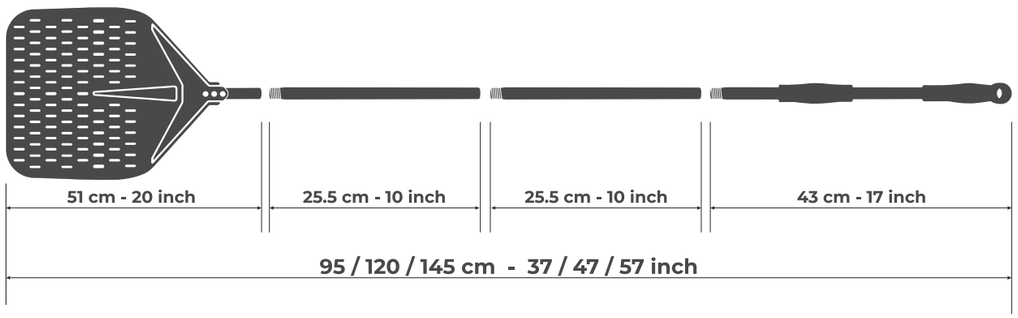

Medium Pizza Peel Set

A set of Alfa design professional pizza peels ideal for the most compact ovens of the Alfa range, which includes a convenient medium pizza peel and a pizza turning peel.

Medium Pizza Peel

Same design and materials as our large Pizza Peel, but slightly smaller for easier use even in more compact ovens.

Turner Peel

You can use the round pizza peel to rotate pies in the oven.

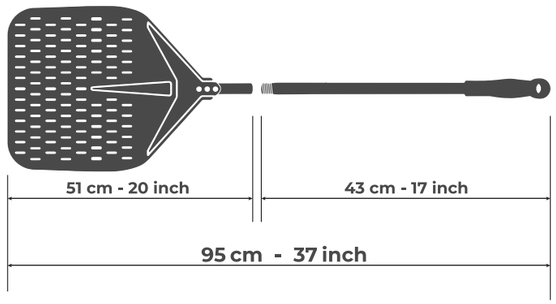

Topping Station

Made of 2 mm thick powder-coated carbon steel, it accommodates 4 professional steel trays, three of which are GN 1/9 in size and one is GN 1/6 in size.

Infrared Thermometer

The infrared thermometer allows you to read the temperature on all points of the oven floor in order to bake at the right time.

Kit Low & Slow

The LOW & SLOW kit is ideal for bread-making or cooking at low temperatures. Thanks to the glass window, you can always keep an eye on your food and, thanks to the butterfly valve keep low temperature under control.

Rocket cutter

With the Rocker cutter – the Alfa mezzaluna pizza cutter – making portions for all your guests will be quick and easy.

Baking tray set

Bake your pizzas in a pan, cook your roasts and potatoes or prepare your favourite cakes with Alfa baking trays.

BBQ 500

An oven grilling kit that enables you to cook any food in a unique way.

Wood Pizza Peel

Made of beech wood, they are formed by a single element, thus avoiding the use of glues or chemical treatments. The lines recall the iconic design of the Alfa blade that facilitates the sliding of the pizza in the oven.

Available in three sizes: 32 cm, 36 cm and 40 cm.

Pastry Board

The traditional pastry board, for the impeccable stretching out of pizza dough. The Alfa pastry board in laminated fir wood represents the ideal fusion between tradition and functionality.

Pizza Dough Box

IThe dough ball box guarantees the proper air conditions and maximum hygiene for the rising process. Suitable for any home refrigerator

Recipe Book

Lots of recipes and precious suggestions on how to use your wood-fired or gas-fuelled oven and get the very best from your Alfa domestic oven.

Silicone oven gloves

Alfa fireproof silicone oven gloves protect your hands effectively when you take hot trays and pans out of the oven or when you handle the door or the hottest parts of your wood-fired oven.

Oven Cover

Made of breathable, yet waterproof technical fabric, it is the ideal protection for your outdoor domestic oven.

Alpha “The Original” pizza maker apron

Protect your clothes in style while cooking pizzas “The Original” Alfa pizza maker apron that protects you from stains, allows you to prepare your pizzas without worries.

Wood Holder

The perfect solution for obtaining a good fire and easily managing it inside the wood-fired oven.

Kit Hybrid

The patented Alfa kit for turning a gas-fuelled oven into a wood-fired oven and doubling your cooking options.

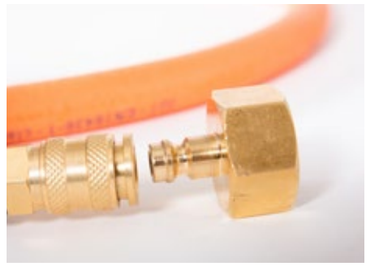

Gas Connector

Alfa has created the first gas regulator with quick coupling and cylinder level indicator that is easy to install, safe and certified.

The gas regulator is used to adapt the gas pressure of the cylinder to your Alfa pizza oven.

What makes the Alfa gas pressure regulator unique is the special quick coupling. Quick to connect and easy to use, it is particularly useful when you need to move the oven: in fact, if needed, you can conveniently detach the cooking tool from the cylinder in total safety.

Alfa Refrattari srl
Via Osteria della Fontana, 63
03012 - Anagni (FR)
Italy

info@alfaovens.co.uk

alfaovens.co.uk